THE INFORMATION CONTAINED IN THIS DRAWING IS THE SOLE PROPERTY OF BACHHUBER MFG. CORP. ANY REPRODUCTION IN PART OR WHOLE WITHOUT THE WRITTEN PERMISSION OF BACHHUBER MFG. CORP. IS PROHIBITED.

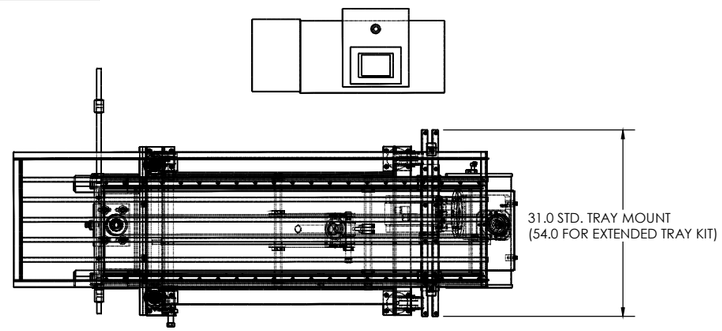

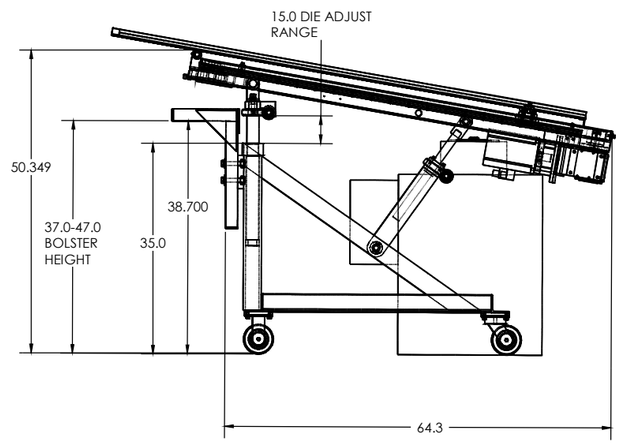

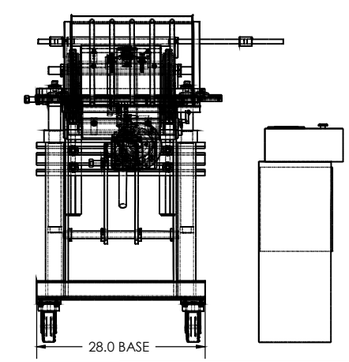

REV.	DESCRIPTION	DATE	APPROVED

UNLESS OTHERWISE SPECIFIED DIMENSIONS ARE IN INCHES
TOLERANCES ARE:
FRACTIONS ± 1/32 DECIMALS X.X ± 0.030 X.XX ± 0.015 X.XXX ± 0.010 ANGLES ± 1/2°

CAD GENERATED DRAWING. DO NOT MANUALLY UPDATE

BACHHUBER MFG. CORP.

Model 320S

NEXT ASSY	USED ON
--	--
--	--
--	--

APPLICATION

MATERIAL

FINISH --

DRAWN MRB

DATE 2/13/08

SCALE 1:16

QTY. REQ'D 1

DO NOT SCALE DRAWING

SIZE B

DWG. NO. Model 320S Std Base

REV. 00

CAD FILE: Model 320S Std Base

SHEET 1 OF 1